Model No. MT062 CORDLESS DRIVER DRILL

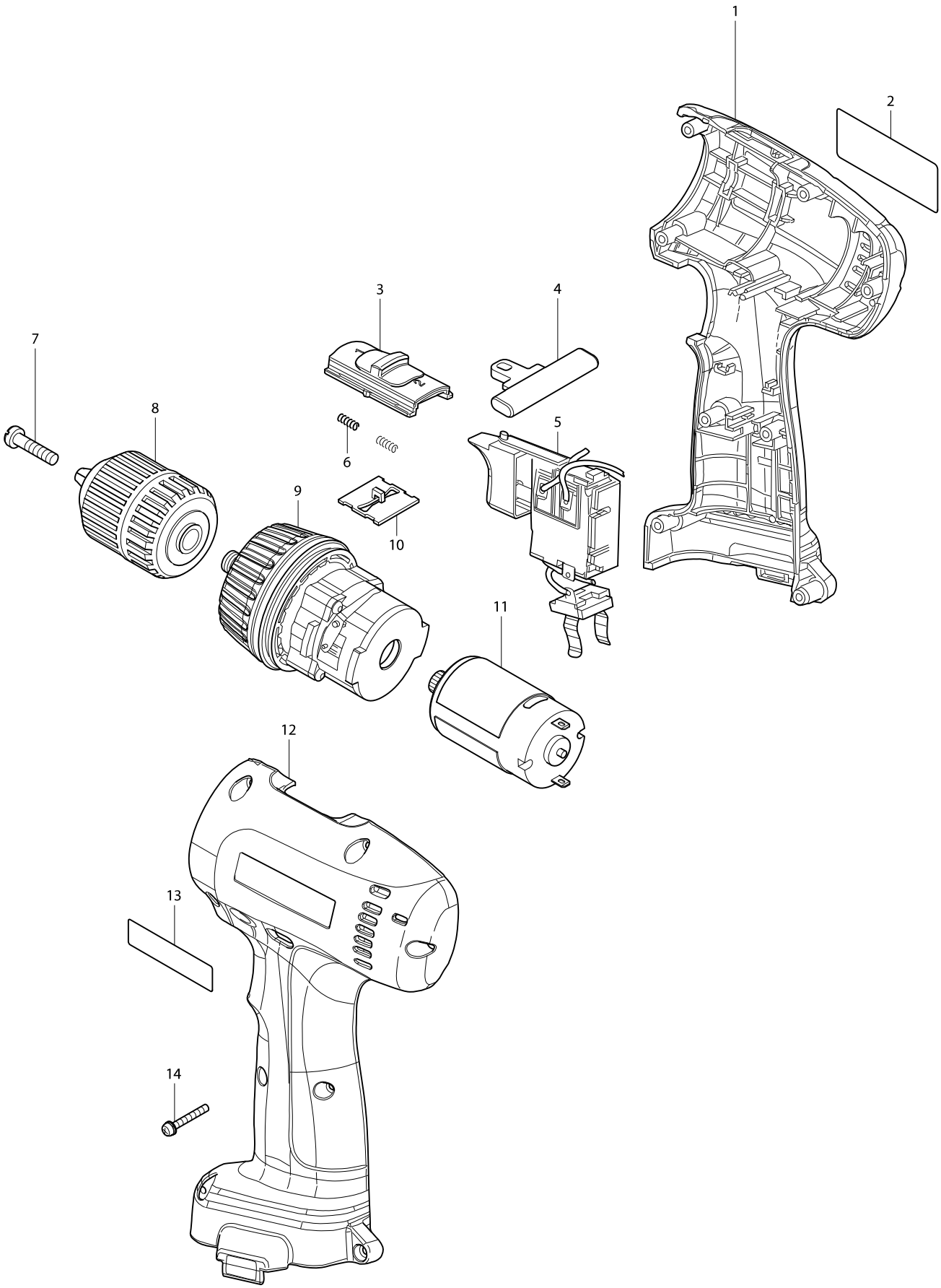

Model No. MT062 CORDLESS DRIVER DRILL

Item	Parts No.	Description	I/C	Qty	N/O	Sales	Purch.	Note
001	183499-5	HOUSING SET		1				
D10		INC. 12,13						
002	853835-6	NAME PLATE MT062		1				
003	417982-3	SPEED CHANGE LEVER		1				
004	417980-7	CHANGE LEVER		1				
005	650531-5	SWITCH DGT-1225A-07		1	*			
005-1	650685-8	SWITCH CGJ-3120E	O	1	*			
005-2	650685-8	SWITCH CGJ-3120E	O	1				
006	233352-6	COMPRESSION SPRING 4		2				
007	251466-9	- PAN HEAD SCREW M5X22		1	*			
007-1	251451-2	- PAN HEAD SCREW M5X22	O	1				
008	763132-1	KEYLESS DRILL CHUCK 10		1	*			
008-1	763180-0	KEYLESS DRILL CHUCK 10	<	1				
009	125176-3	GEAR ASS'Y		1				
010	417981-5	LEVER HOLDER		1				
011	629795-2	DC MOTOR		1				
012	183499-5	HOUSING SET		1				
D10		INC. 1,13						
013	819126-5	MAKTEC LOGO LABEL		1				
014	265109-7	PAN HEAD SCREW M3X22		8				
A01A	417922-1	BATTERY COVER		1				
A01B	417922-1	BATTERY COVER		2				
A02	183517-9	PLASTIC CARRYING CASE		1				
C10	819134-6	MAKTEC LOGO LABEL		1				
C20	182935-8	SLIDE LATCH (R.L) SET		1				
A03	***DC1250	DC1250 BATTERY CHARGER		1	*			
A03-1	***DC1251	DC1251 BATTERY CHARGER SET	<	1				
A04A	193710-7	BATTERY 9050 SET		1				
A04B	193710-7	BATTERY 9050 SET		2				

Please order the parts with a part number.

Print Date 11/10/2016